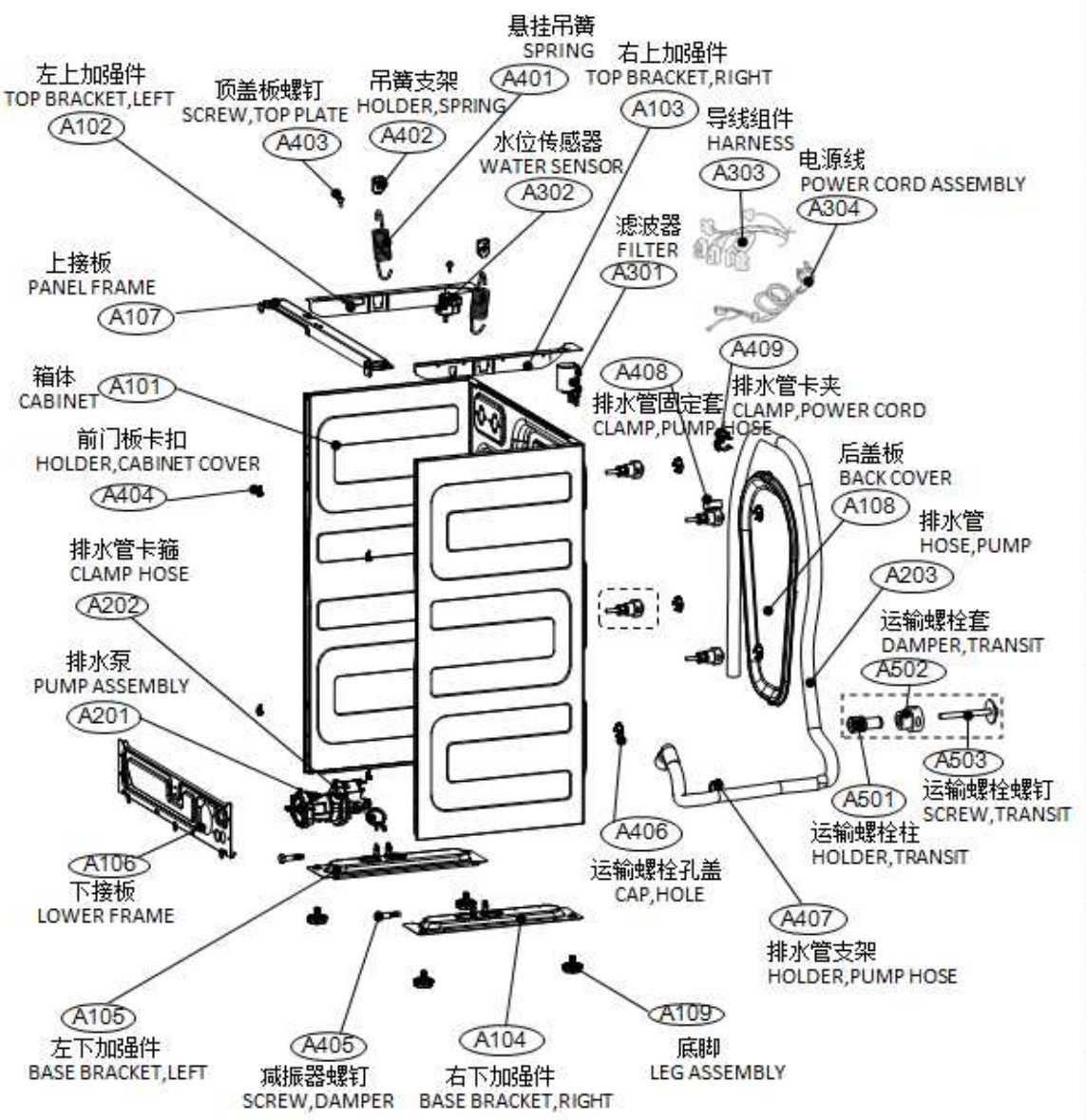
悬挂吊簧
SPRING
A401
左上加强件
TOP BRACKET,LEFT
A102
顶盖板螺钉
SCREW,TOP PLATE
A403
吊簧支架
HOLDER,SPRING
A402
右上加强件
TOP BRACKET,RIGHT
A103
导线组件
HARNESS
A303
水位传感器
WATER SENSOR
A302
电源线
POWER CORD ASSEMBLY
A304
滤波器
FILTER
A301
上接板
PANEL FRAME
A107
箱体
CABINET
A101
A409
A408
排水管卡夹
CLAMP,POWER CORD
排水管固定套
CLAMP,PUMP HOSE
前门板卡扣
HOLDER,CABINET COVER
A404
后盖板
BACK COVER
A108
排水管
HOSE,PUMP
排水管卡箍
CLAMP HOSE
A202
A203
运输螺栓套
DAMPER,TRANSIT
排水泵
PUMP ASSEMBLY
A201
A502
A503
运输螺栓螺钉
SCREW,TRANSIT
A501
运输螺栓柱
HOLDER,TRANSIT
A406
运输螺栓孔盖
CAP,HOLE
A106
下接板
LOWER FRAME
A407
排水管支架
HOLDER,PUMP HOSE
A105
左下加强件
BASE BRACKET,LEFT
A405
减振器螺钉
SCREW,DAMPER
A104
右下加强件
BASE BRACKET,RIGHT
A109
底脚
LEG ASSEMBLY

B606 平衡块螺钉组件 SCREW,BALANCE WEIGHT
B605 上平衡块 BALANCE WEIGHT,UPPER
皮带 BELT B902
皮带轮螺钉组件 SCREW,PULLEY B903
皮带轮 PULLEY B901
B103 轴承2 BEARING,REAR
轴承1 BEARING,FRONT B104
三脚架螺钉 SCREW,SPIDER B504
油封 SEAL,SHAFT B105
内筒后盖 DRUM REAR B501
内筒筒体 DRUM CENTER B502
内筒前盖 DRUM FRONT B503
前外桶 TUB,COVER B201
门封 GASKET B202
门封前卡簧 CLAMP ASSEMBLY B204
门封后卡簧 CLAMP ASSEMBLY B203
B205 进水波纹管 BELLOWS,INLET
B401 轴 SHAFT
B107 加热管支架 BRACKET,HEATER
B102 后外桶 TUB,OUTER
B701 电机脚垫 DAMPER,MOTOR
B702 电机 MOTOR
B801 加热管 HEATER
B304 气压导管 HOSE,CHAMBER
B505 提升筋 LIFTER
B402 三脚架 SPIDER
B603 外桶螺钉 SCREW,TUB
B302 气室 CHAMBER
B604 前平衡块 BALANCE WEIGHT,LOWER
B303 气室卡箍 CLAMP,CHAMBER
B305 排水波纹管卡箍 CLAMP ASSEMBLY, OUTLET BELLOWS
B301 排水波纹管 BELLOWS,OUTLET
B602 减振器销 DAMPER PIN
B106 外桶密封条 SEAL,WATER
B101 轴承座 BEARING HOUSING
B601 减振器 DAMPER,FRICTION

洗涤剂盒上盖 COVER,DISPENSER C101
柔顺剂盖 SOFTENER CAP C303
洗涤剂缓释板 DETERGENT PLATE C302
C102 洗涤剂盒下盖 LOWER,DISPENSER
抽屉盒 DRAWER C301
C202 进水阀 VALVE ASSEMBLY,INLET
C201 进水导管 HOSE,INLET
C103 洗涤剂盒 DISPENSER

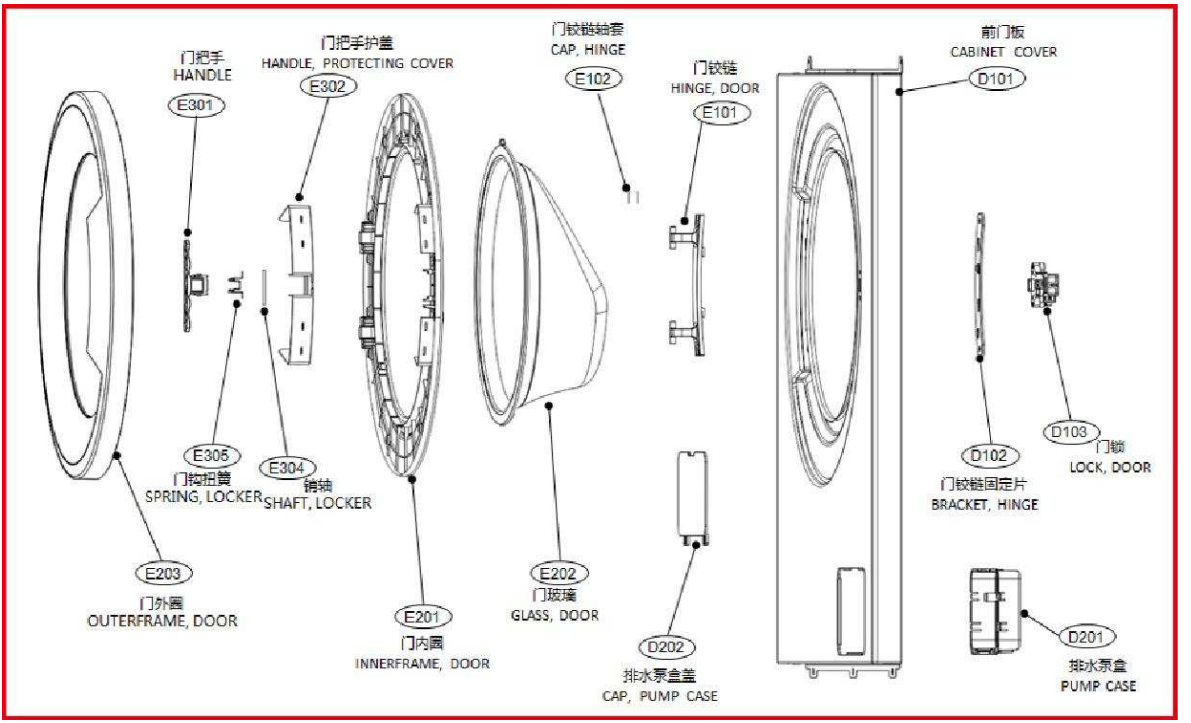
门把手
HANDLE
E301
门把手护盖
HANDLE, PROTECTING COVER
E302
门铰链轴套
CAP, HINGE
E102
门铰链
HINGE, DOOR
E101
前门板
CABINET COVER
D101
E305
门铰扭簧
SPRING, LOCKER
E304
销轴
SHAFT, LOCKER
D103
门锁
LOCK, DOOR
D102
门铰链固定片
BRACKET, HINGE
E203
门外圈
OUTERFRAME, DOOR
E201
门内圈
INNERFRAME, DOOR
E202
门玻璃
GLASS, DOOR
D202
排水泵盒盖
CAP, PUMP CASE
D201
排水泵盒
PUMP CASE

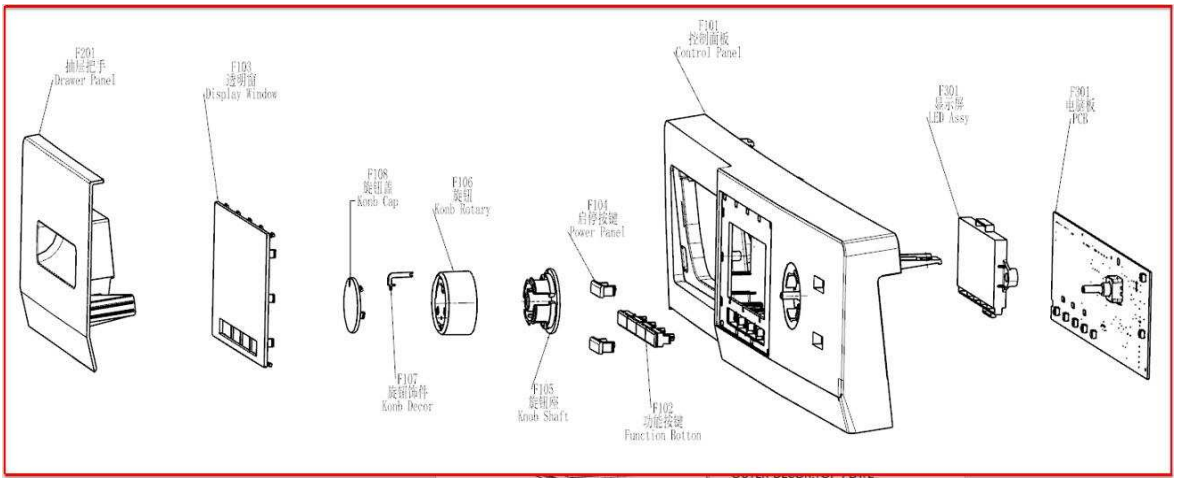
F201
抽屉把手
Drawer Panel
F103
透明窗
Display Window
F108
旋钮盖
Knob Cap
F106
旋钮
Knob Rotary
F107
旋钮饰件
Knob Decor
F105
旋钮座
Knob Shaft
F104
启停按键
Power Panel
F102
功能按键
Function Button
F101
控制面板
Control Panel
F301
显示屏
LED Assy
F301
电路板
PCB

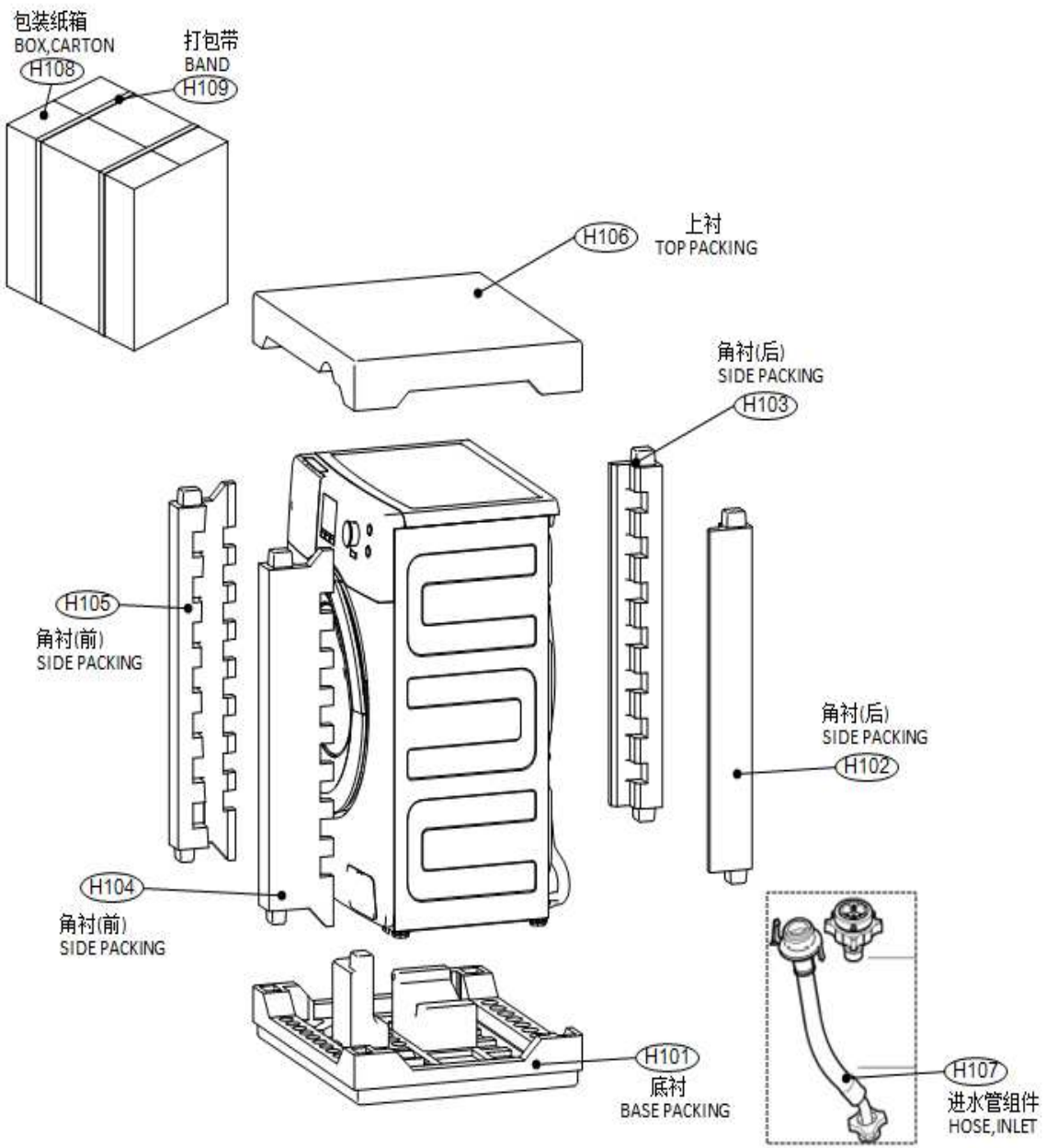
包装纸箱
BOX,CARTON
H108
打包带
BAND
H109
H106
上衬
TOP PACKING
角衬(后)
SIDE PACKING
H103
H105
角衬(前)
SIDE PACKING
角衬(后)
SIDE PACKING
H102
H104
角衬(前)
SIDE PACKING
H101
底衬
BASE PACKING
H107
进水管组件
HOSE, INLET